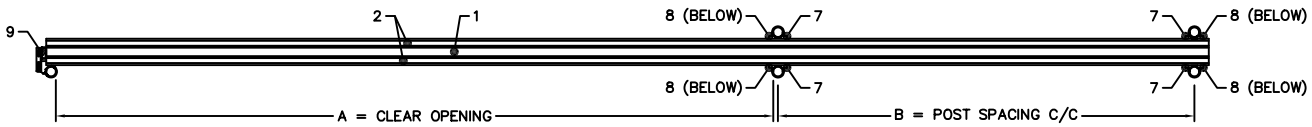

PLAN VIEW

Scale: None

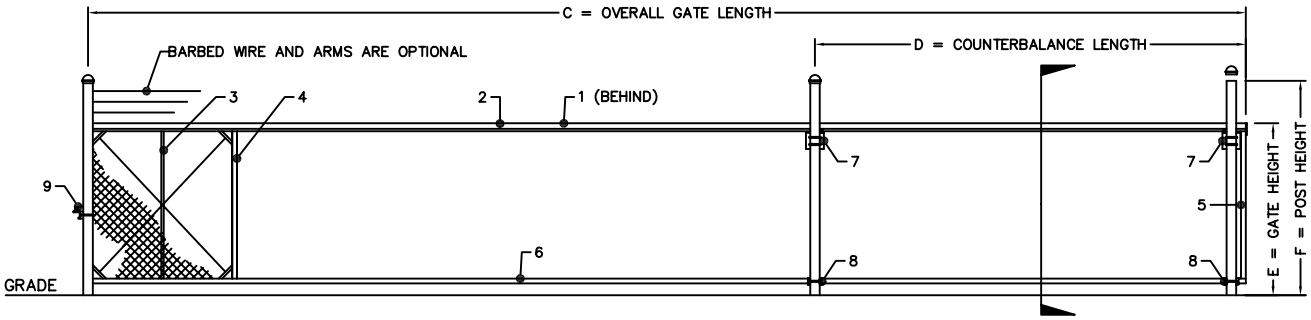

ELEVATION

Scale: None

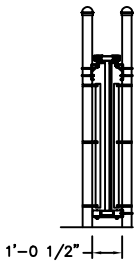

SECTION

Scale: None

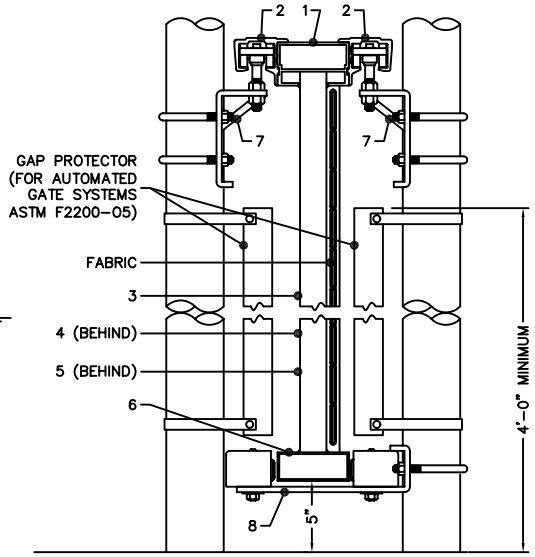

ENLARGED SECTION

Scale: None

CRITICAL DIMENSION CHART

MARK	DESCRIPTION	FORMULA	DIM.
A	CLEAR OPENING	A	-
B	COUNTERBALANCE POST SPACING C/C	(A/2)-11"	-
C	OVERALL GATE LENGTH	A x 1.5	-
D	COUNTERBALANCE LENGTH	A x 0.5	-
E	NOMINAL GATE HEIGHT	E	-
F	POST HEIGHT (W BARB ARMS)	E + 1'-6"	-
G	FABRIC HEIGHT	E - 1'-0"	-

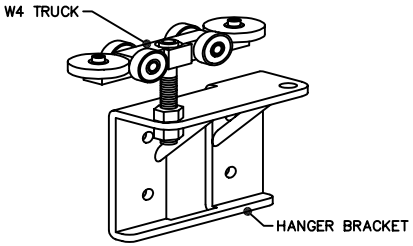

7 GATE HANGER ASSEMBLY

Scale: None

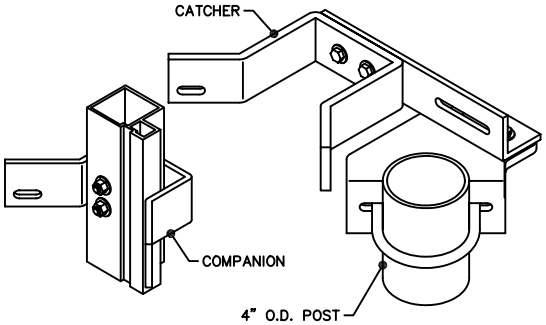

9 CATCH ASSEMBLY

Scale: None

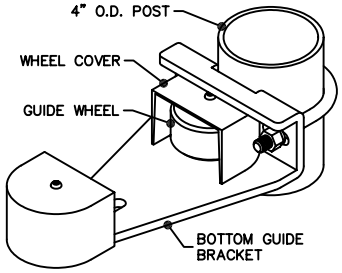

8 BOTTOM GUIDE

Scale: None

NOTES:
1. ALL FITTINGS STANDARDLY PROVIDED FOR 4" O.D. POSTS. OTHER SIZES AVAILABLE UPON REQUEST.
2. BARB ARMS (FOR BARBED WIRE) OPTIONAL.

TYMETAL CORP.
www.tymetal.com
2549 STATE ROUTE 40
GREENWICH, N.Y. 12834
PH:(800) 328-4283 - FX:(518) 692-9404

STRUCTURAL CANTILEVER SLIDE GATE

BILL OF MATERIALS

MARK	DESCRIPTION	NOTES:
1	TOP PRIMARY MEMBER	
2	STANDARD TRACK	
3	1" x 2" ALUM. TUBE	CENTERED BETWEEN 2x2'S
4	2" x 2" ALUM. TUBE	
5	STANDARD PRIMARY	TYP. AT ENDS OF GATE FRAME
6	2" x 5" ALUM. TUBE	
7	HANGER ASSEMBLY	4 REQUIRED
8	BOTTOM GUIDE ASSEMBLY	2 REQUIRED
9	CATCH ASSEMBLY	1 REQUIRED