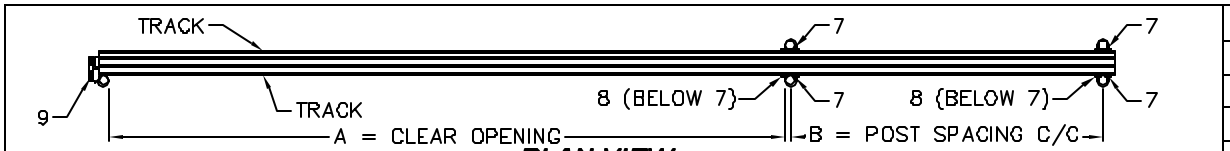

PLAN VIEW
Scale: None

CRITICAL DIMENSION CHART			
MARK	DESCRIPTION	FORMULA	DIM.
A	CLEAR OPENING	A	-
B	COUNTERBALANCE POST SPACING C/C	(A/2)-11"	-
C	OVERALL GATE LENGTH	A x 1.5	-
D	COUNTERBALANCE LENGTH	A x 0.5	-
E	NOMINAL GATE HEIGHT	E	-
F	POST HEIGHT (W BARB ARMS)	E + 1'-6"	-
G	FABRIC HEIGHT	E - 1'-0"	-

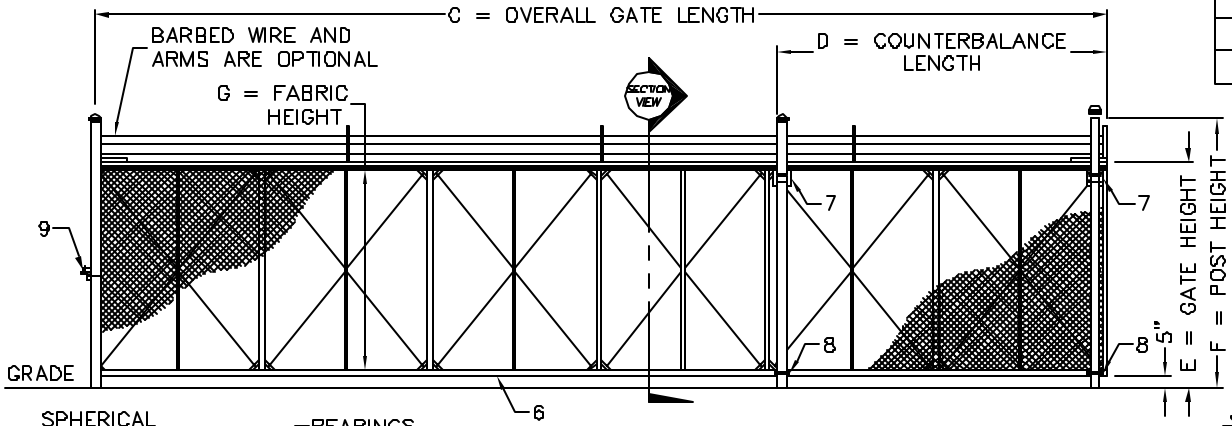

ELEVATION
Scale: None

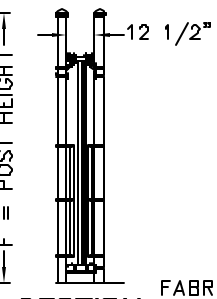

SECTION
Scale: None

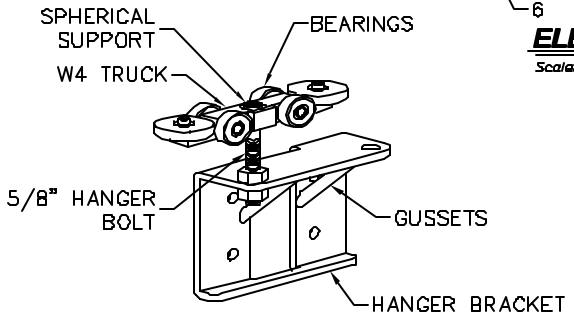

7 GATE HANGER ASSEMBLY
Scale: None

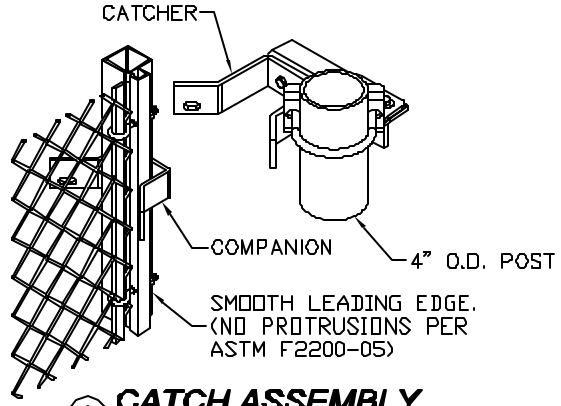

9 CATCH ASSEMBLY
Scale: None

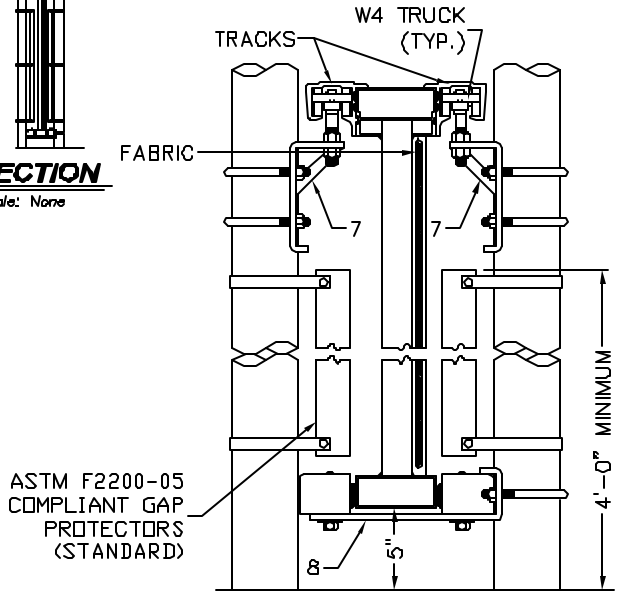

ENLARGED SECTION
Scale: None

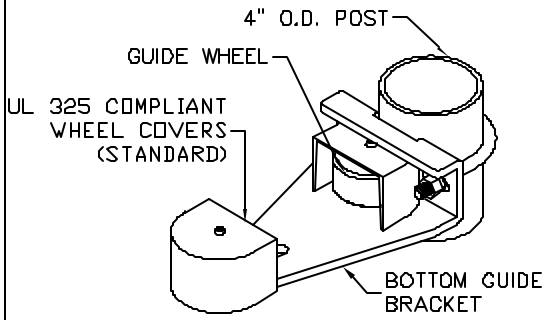

8 BOTTOM GUIDE
Scale: None

NOTES:
1. ALL FITTINGS STANDARDLY PROVIDED FOR 4" O.D. POSTS. OTHER SIZES AVAILABLE UPON REQUEST.
2. BARB ARMS (FOR BARBED WIRE) OPTIONAL.

TYMETAL CORP.
www.tymetal.com
2549 STATE ROUTE 40
GREENWICH, N.Y. 12834
PH:(800) 328-4283 - FX:(518) 692-9404

STRUCTURAL CANTILEVER SLIDE GATE