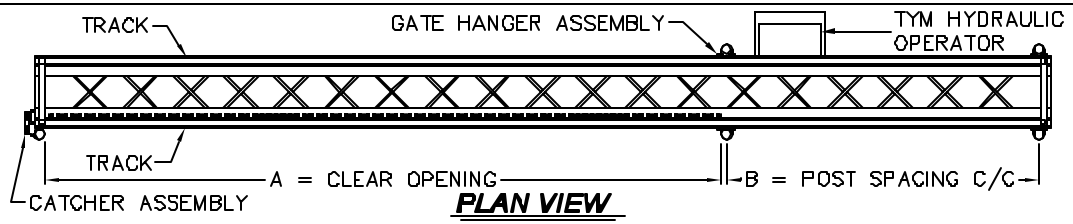

PLAN VIEW
Scale: None

CRITICAL DIMENSION CHART			
MARK	DESCRIPTION	FORMULA	DIM.
A	CLEAR OPENING	A	-
B	COUNTERBALANCE POST SPACING C/C	(A/2)-11"	-
C	OVERALL GATE LENGTH	A x 1.5	-
D	COUNTERBALANCE LENGTH	A x 0.5	-
E	NOMINAL GATE HEIGHT	E	-
F	POST HEIGHT	E + 6"	-
G	PICKET HEIGHT	G	-

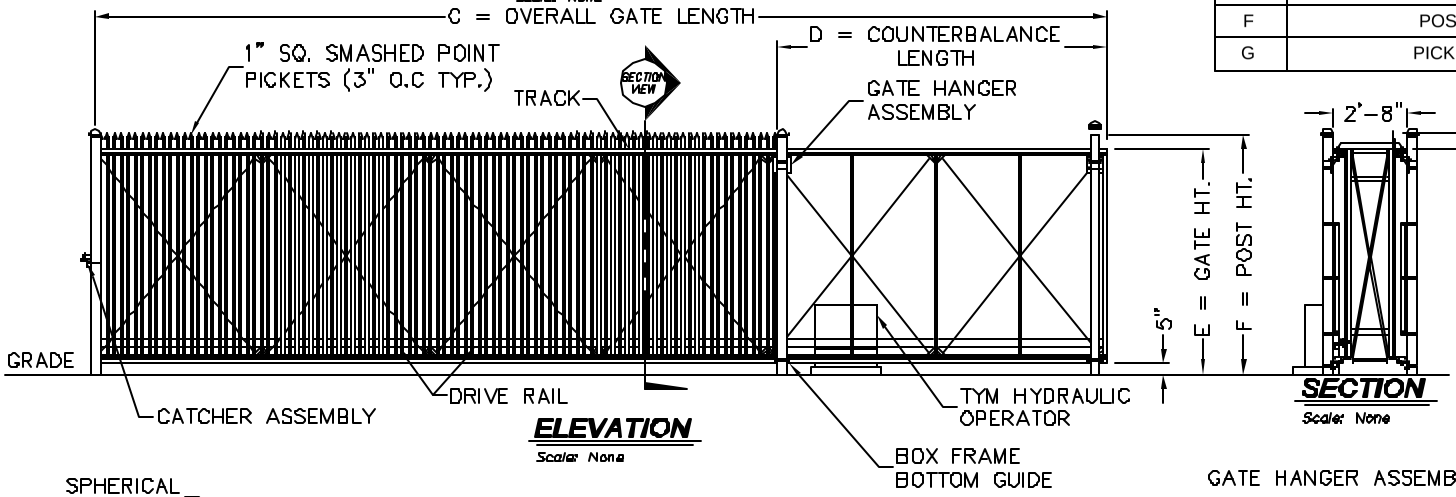

ELEVATION
Scale: None

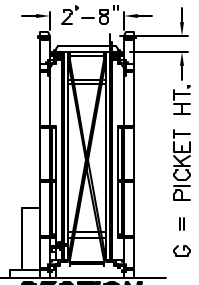

SECTION
Scale: None

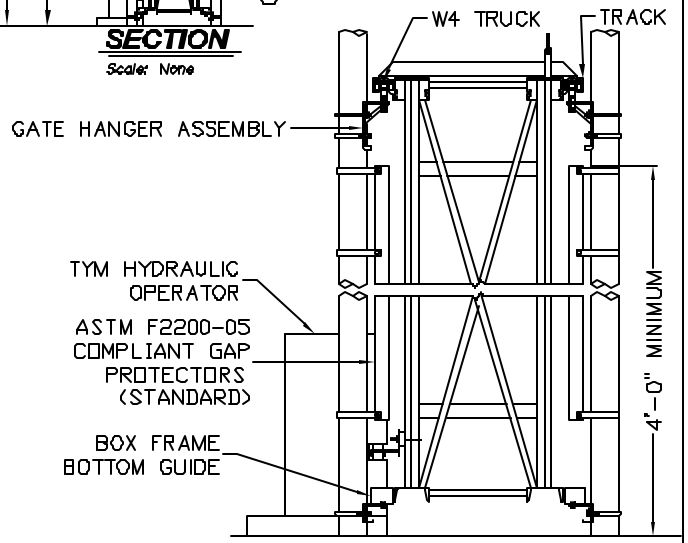

ENLARGED SECTION
Scale: None

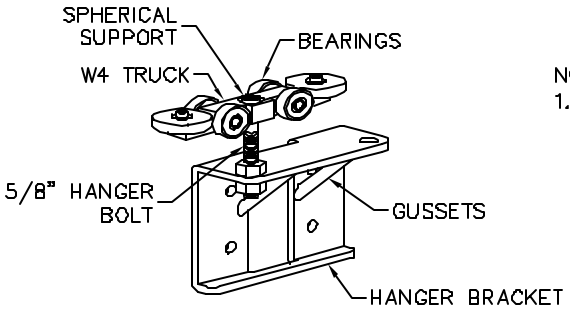

GATE HANGER ASSEMBLY
Scale: None

NOTES:
1. ALL FITTINGS STANDARDLY PROVIDED FOR 4" O.D. POSTS. OTHER SIZES AVAILABLE UPON REQUEST.

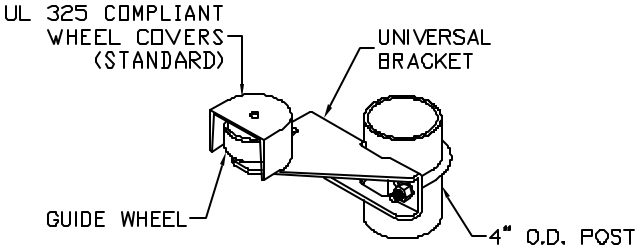

BOX FRAME BOTTOM GUIDE
Scale: None

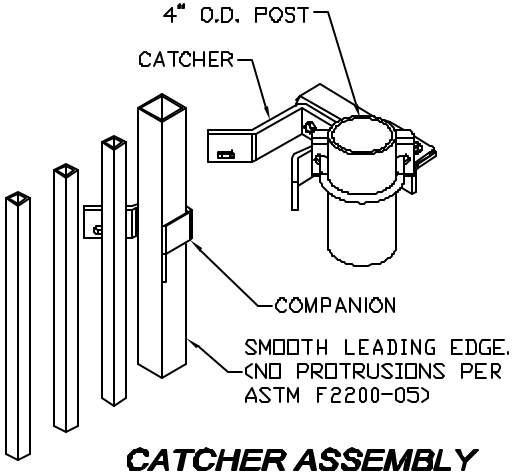

CATCHER ASSEMBLY
Scale: None

TYMETAL CORP.
www.tymetal.com
2549 STATE ROUTE 40
GREENWICH, N.Y. 12834
PH:(800) 328-4283 - FX:(518) 692-9404

TYM-HYD-B SECURITY GATE SYSTEM
(WITH BOX FRAME CANTILEVER GATE)