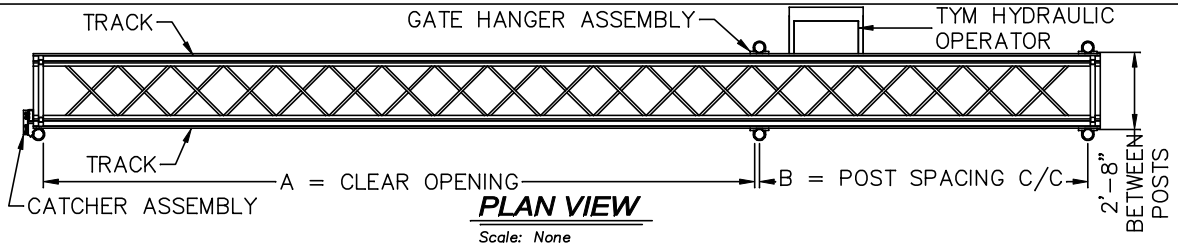

PLAN VIEW

Scale: None

CRITICAL DIMENSION CHART

MARK	DESCRIPTION	FORMULA	DIM.
A	CLEAR OPENING	A	-
B	COUNTERBALANCE POST SPACING C/C	(A/2)-11"	-
C	OVERALL GATE LENGTH	A x 1.5	-
D	COUNTERBALANCE LENGTH	A x 0.5	-
E	NOMINAL GATE HEIGHT	E	-
F	POST HEIGHT (W BARB ARMS)	E + 1'-6"	-
G	FABRIC HEIGHT	E - 1'-0"	-

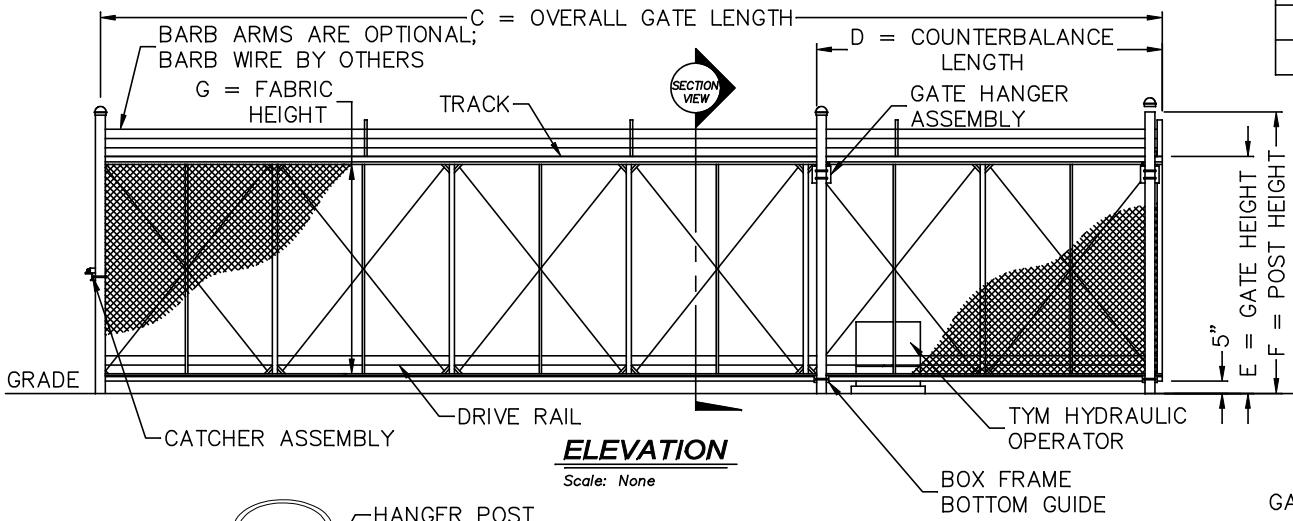

ELEVATION

Scale: None

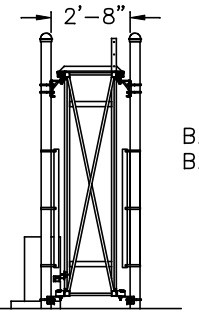

SECTION

Scale: None

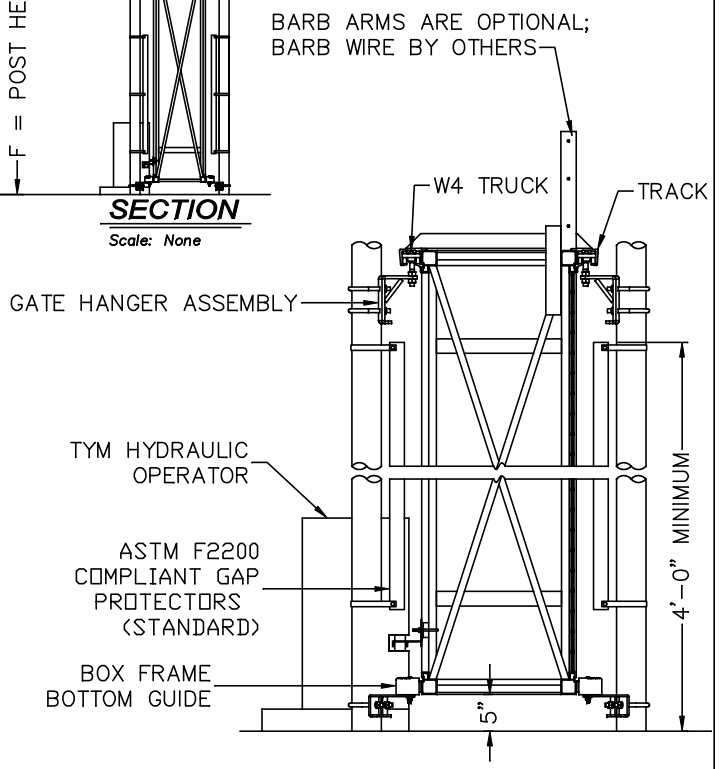

ENLARGED SECTION

Scale: None

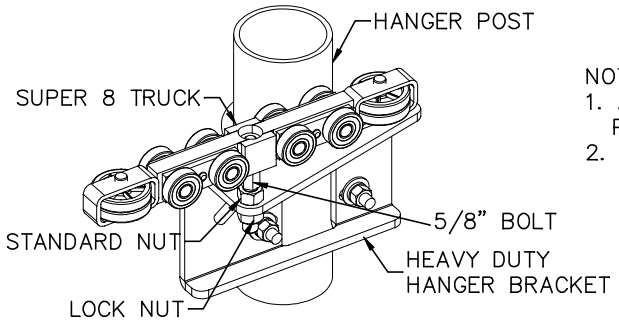

GATE HANGER ASSEMBLY

Scale: None

NOTES:
1. ALL FITTINGS STANDARDLY PROVIDED FOR 4" O.D. POSTS. OTHER SIZES AVAILABLE UPON REQUEST.
2. BARB ARMS (FOR BARBED WIRE) OPTIONAL.

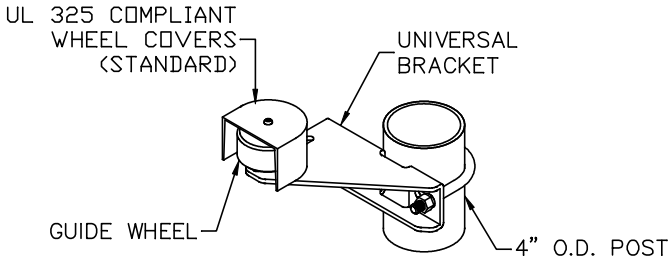

BOX FRAME BOTTOM GUIDE

Scale: None

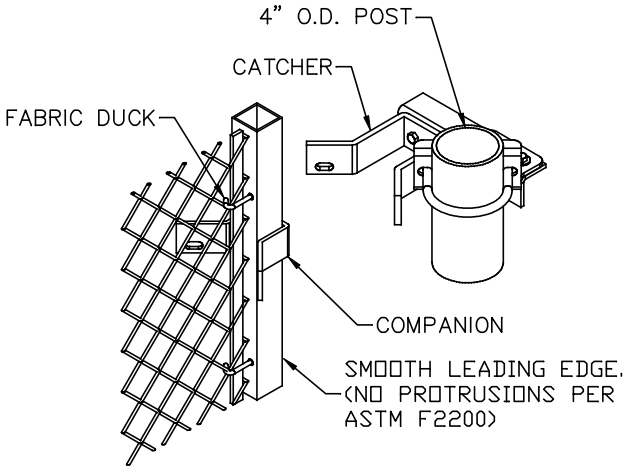

CATCHER ASSEMBLY

Scale: None

REV. 1 – 2/16/24

TYMETAL CORP.
www.tymetal.com
678 WILBUR AVENUE
GREENWICH, N.Y. 12834
PH:(800) 328-4283 – (518) 692-9930

TYM-HYD-B SECURITY GATE SYSTEM
(WITH BOX FRAME CANTILEVER GATE)